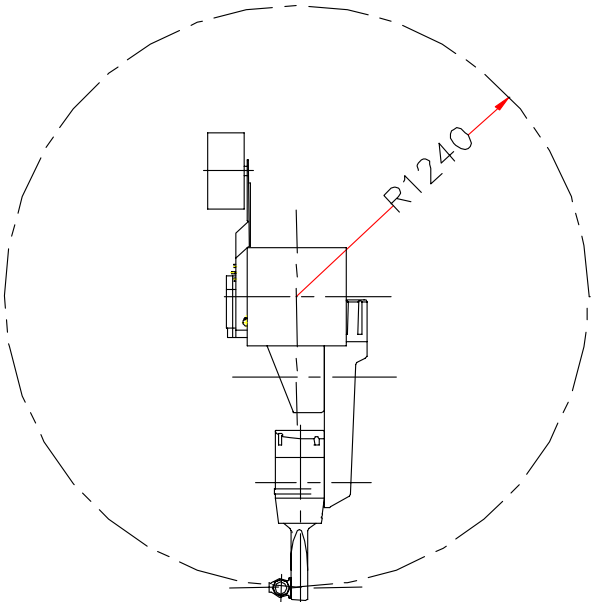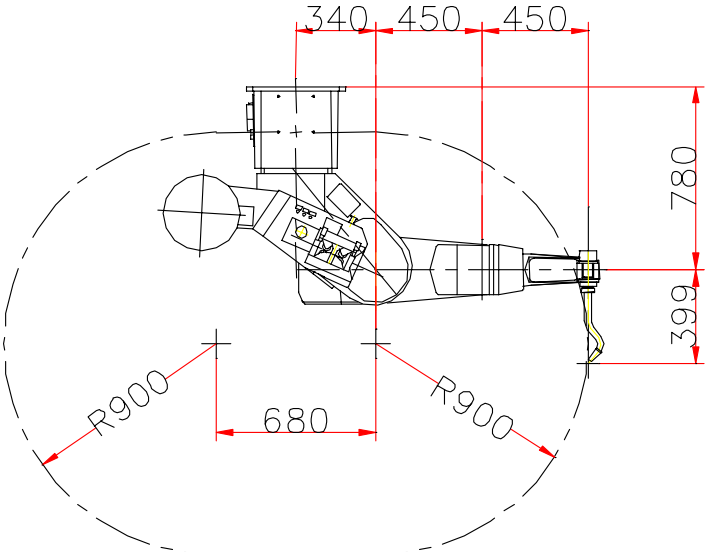RT280-8A Welding Robot